low power high voltage diodes book 1 part 4

$I_{F(AV)}$ max. T_{amb} = 35°C (mA)	T_{oil} = 50°C (mA)	Type No.	V_{RWM} max. (kV)	Description
2.5	–	**BY182**	12	E.H.T. rectifiers in plastic envelopes.
2.5	–	**BY209**	11.5	E.H.T. soft-recovery rectifier diode.
2.5	–	**BY409**	11.5	E.H.T. soft-recovery rectifier diode
2.5	–	**BY476**	16	E.H.T. soft-recovery rectifier diode
–	50	**BYX35**	25	Silicon diode in a ceramic tube. Intended for oil cooling.
–	200	**BYX90**	6	High voltage rectifier diode
–	200	**BYX91–90K** **–120K** **–150K** **–180K**	90 120 150 180	E.H.T. rectifiers capable of absorbing transients; primarily intended for X-ray applications.

silicon voltage reference diodes book 1 part 3

Type No.	Outline	Dwg. ref.	Zener Voltage (at test I_Z) (V) Min.	Max.	Typical Temperature Coefficient (%/°C)	Ambient Temperature Range (°C) Min.	Max.	Max. Dynamic Resistance (at test I_Z) (Ω)	Test I_Z (mA)	I_{ZM}max. (mA)	P_{tot} max. (mW)
BZV10 **BZV11** **BZV12** **BZV13** **BZV14**	DO-35	H	6.2	6.8	± 0.01 ± 0.005 ± 0.002 ± 0.001 ± 0.0005	0	+70	50	2	50	400
BZX90 **BZX91** **BZX92** **BZX93** **BZX94**	DO-35	H	6.2	6.8	± 0.01 ± 0.005 ± 0.002 ± 0.001 ± 0.0005	–55	+100	15	7.5	50	400
BZY78	DO-7	D1	5.1	5.6	+ 0.006 – 0.004	–40 +25	+25 +100	20	11.5	25	400
1N821 **1N823** **1N825** **1N827** **1N829**	DO-35	H	5.8	6.5	± 0.01 ± 0.005 ± 0.002 ± 0.001 ± 0.0005	–55	+100	15	7.5	50	400

OUTLINES and DIMENSIONS (millimetres)

A

B.S.3934 SO-16

DO-1
DO-2
DO-3

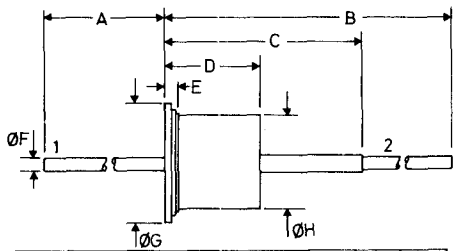

	1	2	A min.	B min.	C	D max.	E max.	ØF max.	ØG max.	ØH max.
A1	a	k	35	51	17	7.7	1.6	1.1	9.6	7.1
A2	k	a	35	49	17	8.5	1.9	1.1	9.7	7.1
A3	k	a	35	51	17	7.7	1.6	1.1	9.6	7.1

B

B.S.3934 SO-10

DO-4

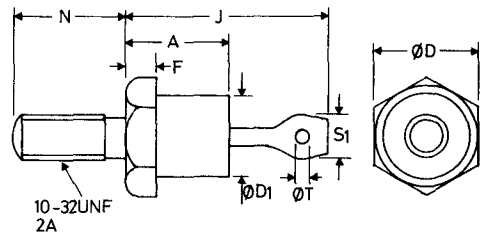

A 10.3 max. J 20.3 max.
ØD 11.1 max. N 11.5 max.
ØD1 9.3 max. S1 4.8 max
F 3.2 ØT 1.6 min

	Stud	Eyelet
B1	k	a
B2	a	k

C

B.S. 3934 SO-13

DO-5

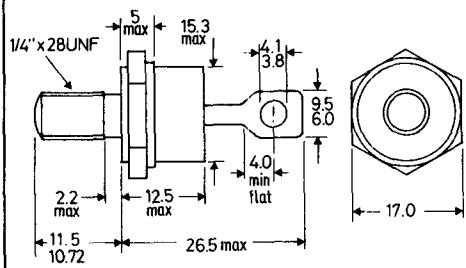

	Stud	Eyelet
C1	k	a
C2	a	k

D

DO-7
DO-14
DO-15

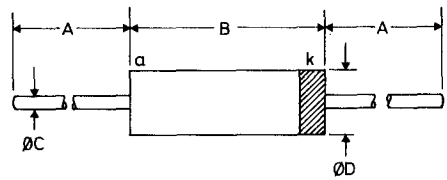

		A min.	B max.	ØC nom.	ØD max.
D1	DO-7	25.4	7.6	0.52	2.5
D2	DO-14	25.4	7.6	0.5	3.3
D3	DO-15	25.4	6.4	0.8	3.2

E

DO-22
SOD-47

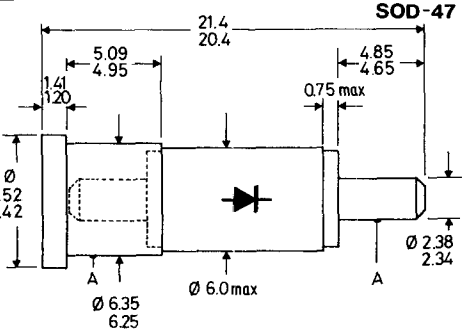

A = concentricity tolerance = ± 0.20

F

DO-30

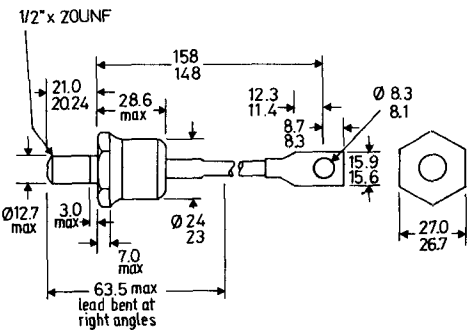

BZW86 Blue sleeve - anode to eyelet
BZW86R Red sleeve - anode to stud

These drawings give limited information for quick reference purposes. For equipment design more complete information should be obtained from individual data sheets in the Technical Handbook or from standard B.S. or JEDEC outline drawings.

G

DO-31

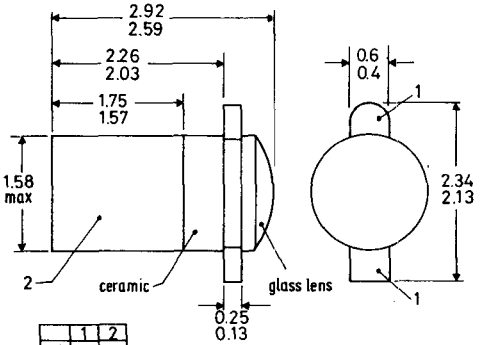

	1	2
G1	k	a
G2	e	c

For LED's the overall length = 3.60/2.97

H

DO-35

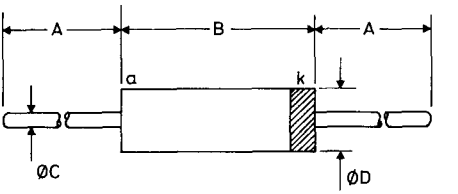

A min.	B max.	ØC max.	ØD max.
25.4	4.25	0.56	1.85

J

DO-37
SOD-49

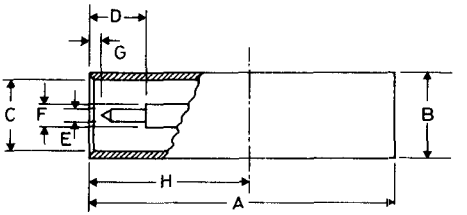

A	19.43/18.67	ØE	0.84/0.79
ØB*	5.59/5.49	ØF	1.57/1.52
ØC	4.80/4.72	G	0.71/0.15
D	3.73 min.	H	10.32 nom.

*These tolerances apply only over H

K

SOD-17

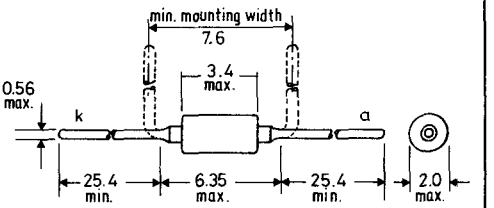

Cathode indicated by the broad band of colour code

L

SOD-18

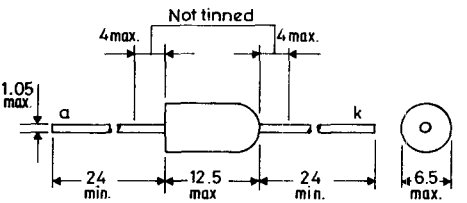

M

SOD-23

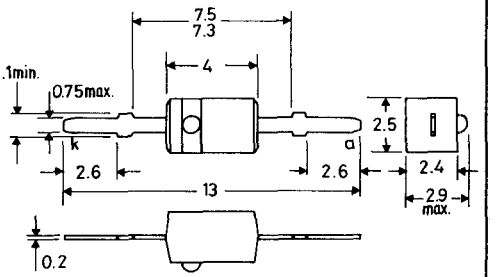

N

B.S.3934 SO 86 — SOD-31

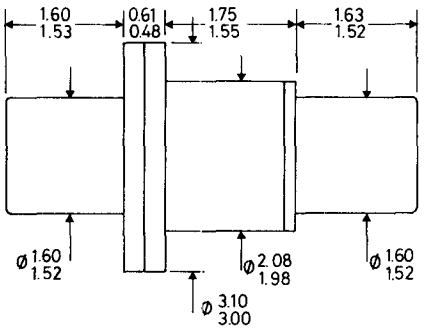

O

SOD-38

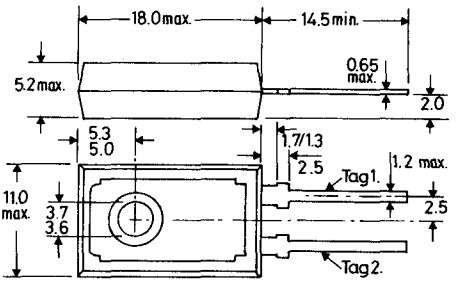

	polarity normal	reverse
Tag 1 = base-plate:	cathode	anode
Tag 2 :	anode	cathode

P

SOD-39

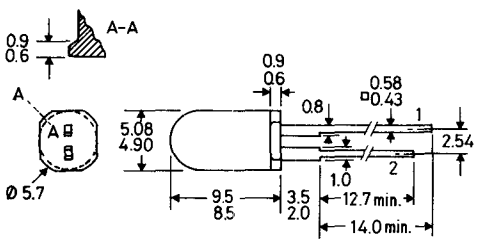

	1	2
P1	a(+)	k(–)
P2	e	c

Q

SOD-42

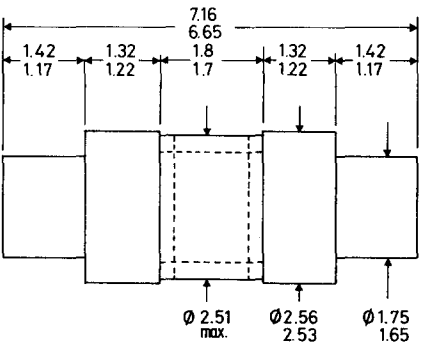

R

SOD-43

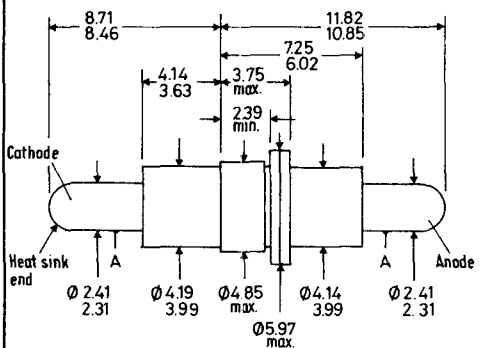

A = concentricity tolerance = ± 0.13

S

SOD-45

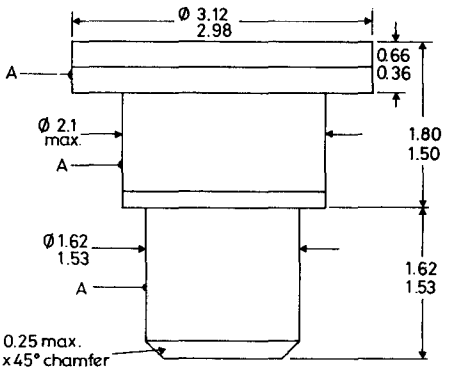

A = concentricity tolerance = ± 0.13

These drawings give limited information for quick reference purposes. For equipment design more complete information should be obtained from individual data sheets in the Technical Handbook or from standard B.S. or JEDEC outline drawings.

T — SOD-46

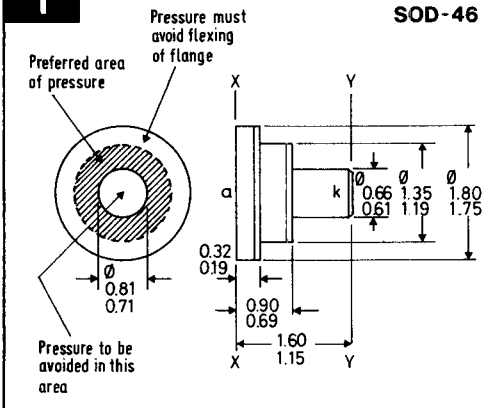

U — SOD-50

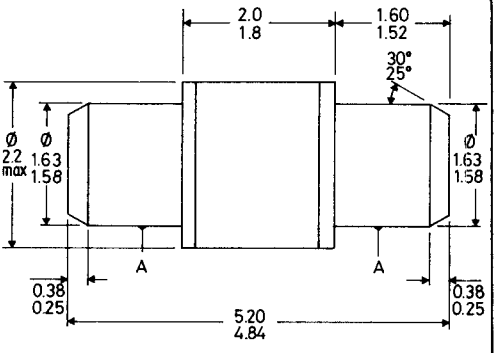

A = concentricity tolerance = ± 0.15

V — SOD-51

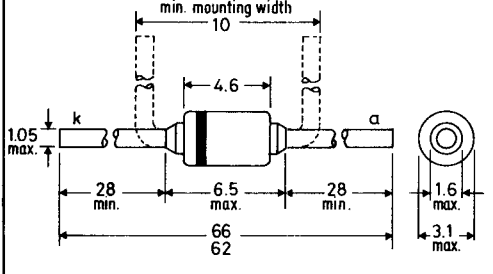

W — SOD-52

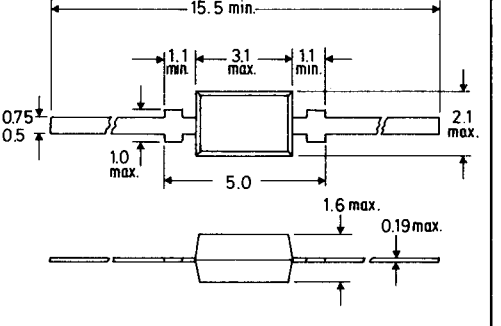

The coloured end indicates the cathode

X — SOT-23

	1	2	3
X1	b	e	c
X2	s	d	g
X3	nc	a	k
X4	a1	a2	k
X5	k1	k2	a
X6	k1	a2	common
X7	e	b	c

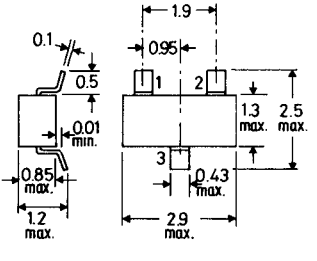

Y — SOT-25

Connections	1	2	3
Y1	e	b	c
Y2	b	e	c

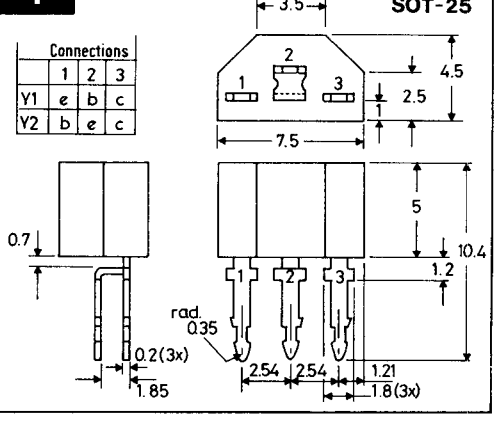

Z — SOT-37

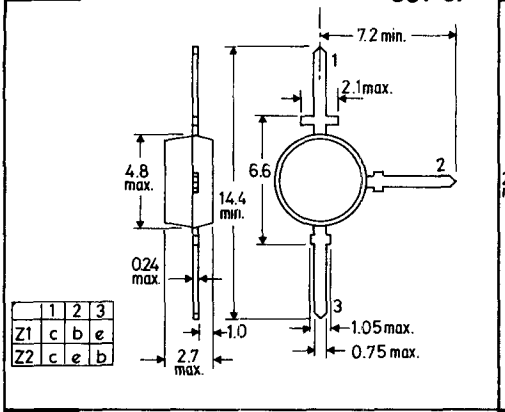

	1	2	3
Z1	c	b	e
Z2	c	e	b

AC — SOT-48/2

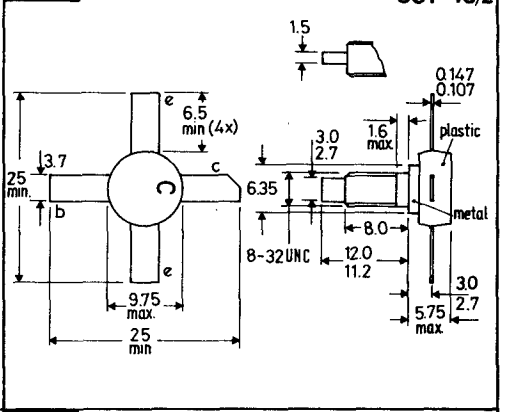

AD — SOT-48/3

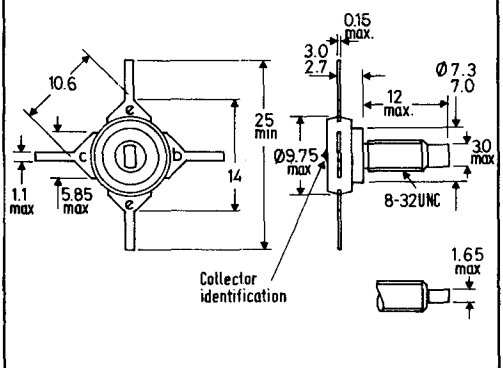

AE — SOT-48/4

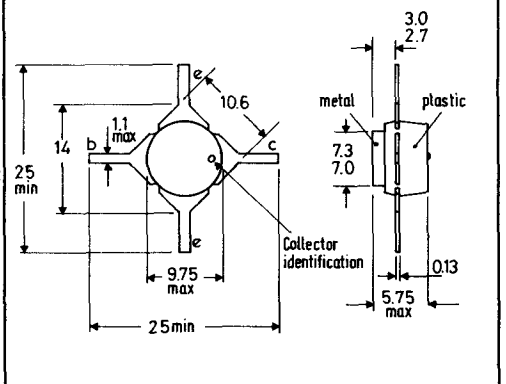

AF — SOT-48 HEADER

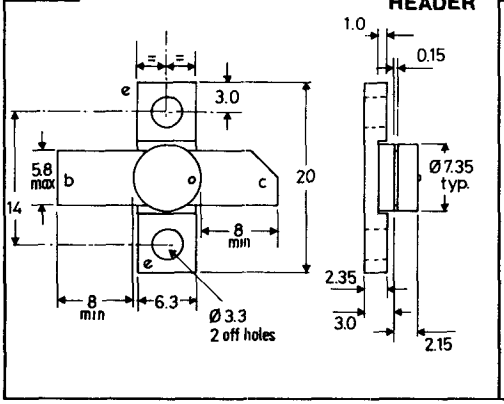

AG — SOT-55

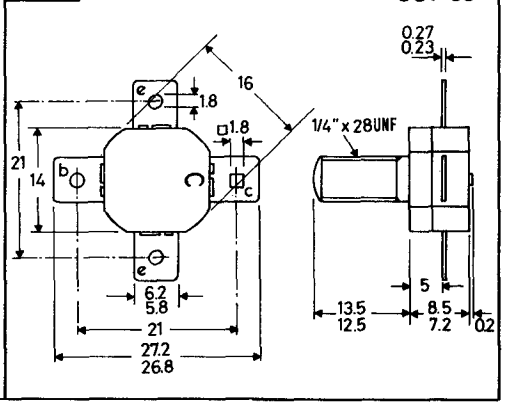

These drawings give limited information for quick reference purposes. For equipment design more complete information should be obtained from individual data sheets in the Technical Handbook or from standard B.S. or JEDEC outline drawings.

AH

SOT-56

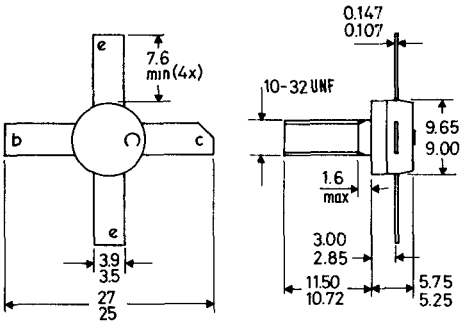

AJ

SOT-60

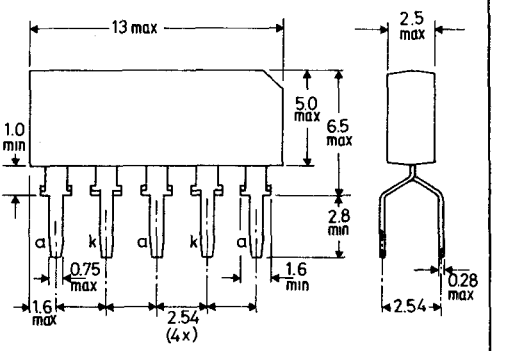

AK

SOT-70

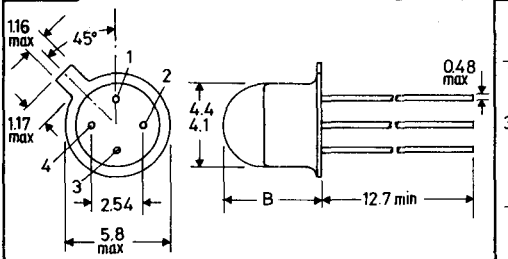

	1	2	3	4	B max
AK1	a	–	k	–	5.08
AK2	e	b	c	–	4.5
AK3	Vp	IP	GND	OP	5.08

AL

SOT-80

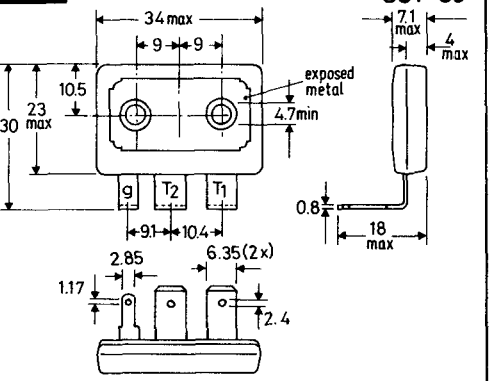

AM

SOT-89

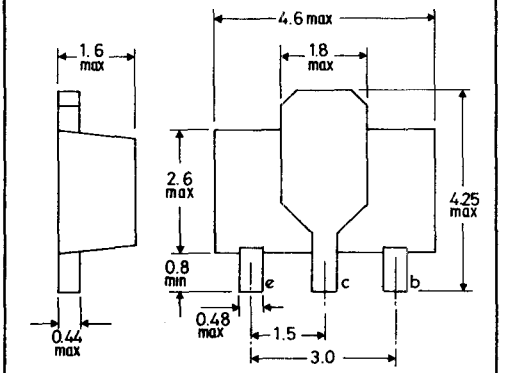

AN

SOT-100

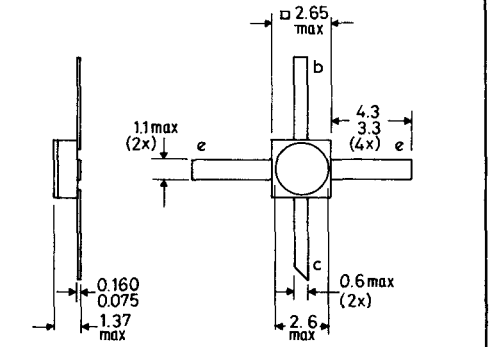

AO — SOT-103

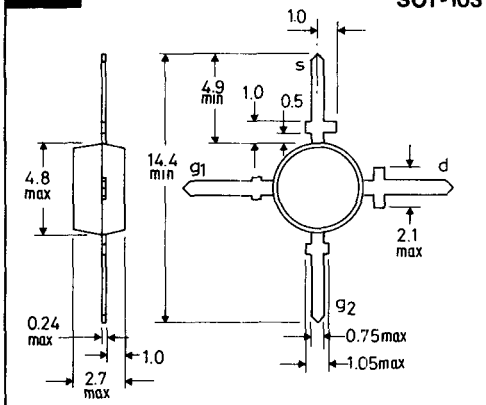

AP — SOT-105

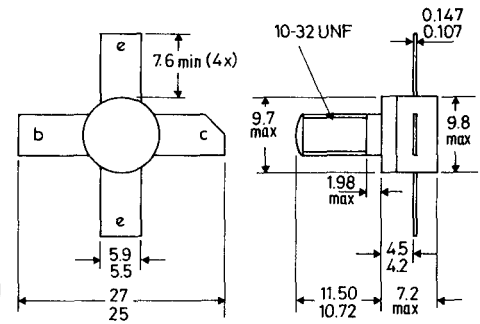

AQ — B.S.3934 SO-21/SB3-10 — TO-1

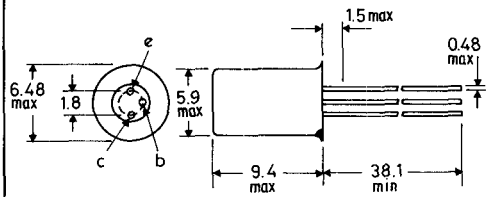

AR — B.S.3934 SO-5B/SB2-2 — TO-3

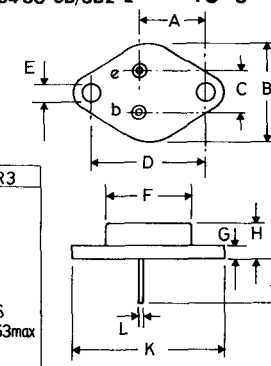

	AR1	AR2	AR3
A		16.9	
B		26.6max	
C		10.9	
D		30.1	
E		4.2max	
F		20.3max	
G	3.15	1.6	1.6
H	9.5max	9.5max	8.63max
J		12.0	
K		39.5max	
L		1.0	

AS — B.S.3934 SO-3/SB3-3B — TO-5

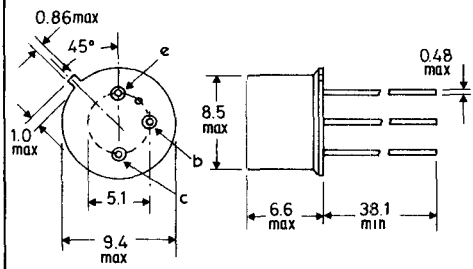

AS1: collector connected to case
AS2: base connected to case

AT — B.S.3934 SO-12A/SB3-6A — TO-18

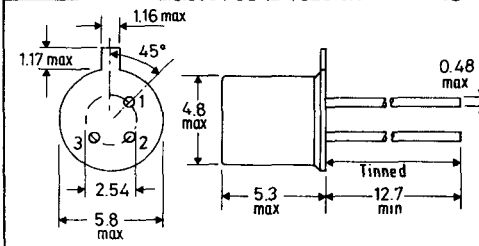

	1	2	3
AT1	e	b	c+env.
AT2	s	d	g+env.
AT3	d	g	s+env.
AT4	k	–	a
AT5	a	–	k
AT6	k	–	a

These drawings give limited information for quick reference purposes. For equipment design more complete information should be obtained from individual data sheets in the Technical Handbook or from standard B.S. or JEDEC outline drawings.

AU

TO-18
(with lens)

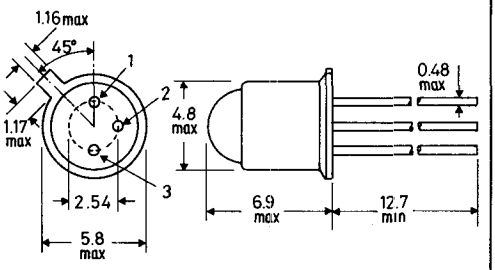

	1	2	3
AU1	a	a	k
AU2	e	b	c+case
AU3	k	–	a

AV

B.S.3934 SO-3/SB3-3A **TO-39**

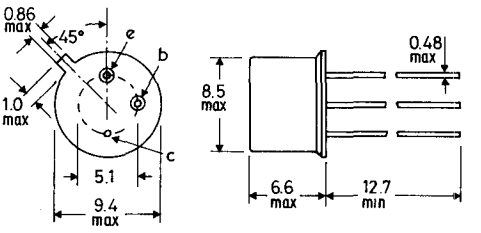

AV1: b+case
AV2: case isolated
AV3: c+case
AV4: e.cathode
b.gate
c.anode+case

AV5: e.b. cell connections
c. metal case
AV6: red spot indicates
+ve connection

AW

B.S.3932 SO-36 **TO-48**

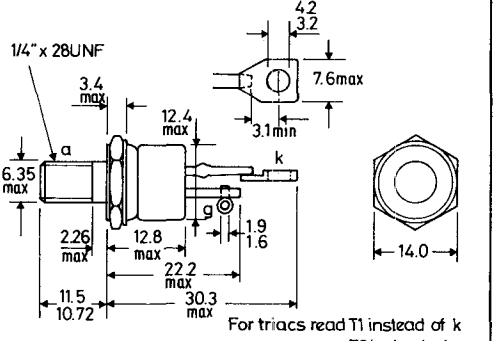

For triacs read T1 instead of k
T2 instead of a

AX

TO-60

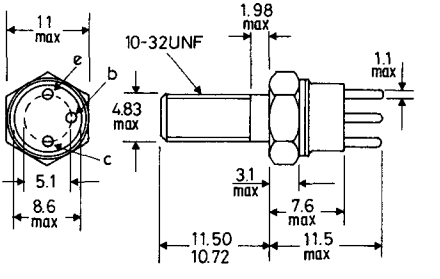

Emitter connected to envelope

AY

B.S.3934 SO-35A **TO-64**

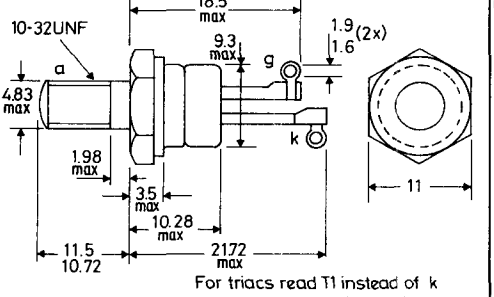

For triacs read T1 instead of k
T2 instead of a

AZ

TO-71

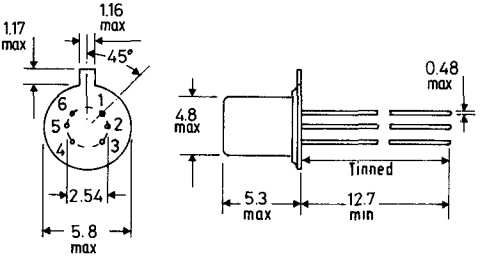

Pin	1	2	3	4	5	6
AZ1	e1	e2	c2	b2	b1	c1
AZ2	s1	d1	g1	s2	d2	g2

BA

B.S.3934 SO-12A/SB4-3 **TO-72**

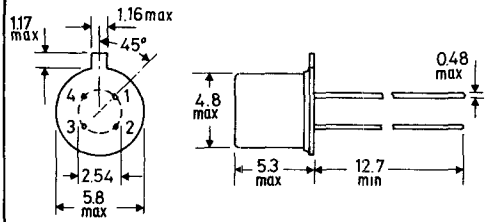

	1	2	3	4
BA1	b	e	c	s+envelope
BA2	e	b	c	s+envelope
BA3	s	d	g	screen +envelope
BA4	d	g2	g1	s+b+envelope
BA5	d	s	g	b+envelope
BA6	k	gk	ga	a

BB

TO-92 variant

Pin	1	2	3
BB1	e	b	c
BB2	b	e	c
BB3	d	s	g
BB4	g	a	k
BB5	b	c	e

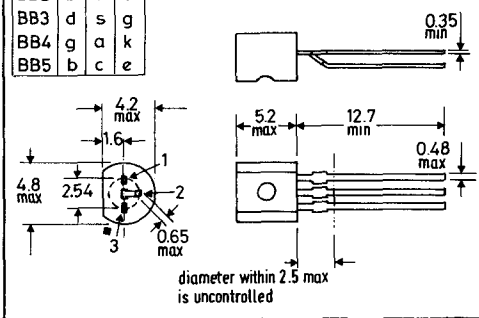

BC

B.S.3934 SO-30C **TO-94**

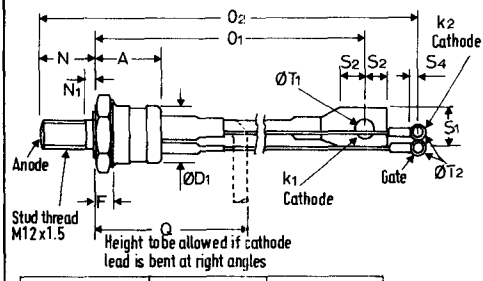

A	28.5max	O1	158 max	S4	3.8min
ØD1	24.1max	O2	190max	ØT1	8.3max
F	8.9max	Q	63.5max	ØT2	4.2max
N	21.0max	S1	16.5max		
N1	3.0max	S2	9.6min		

BD

TO-103

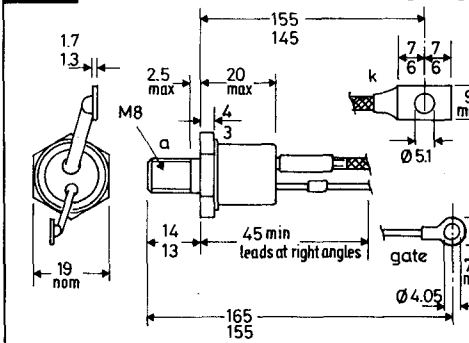

For triacs read T1 instead of k
T2 instead of a

BE

TO-126

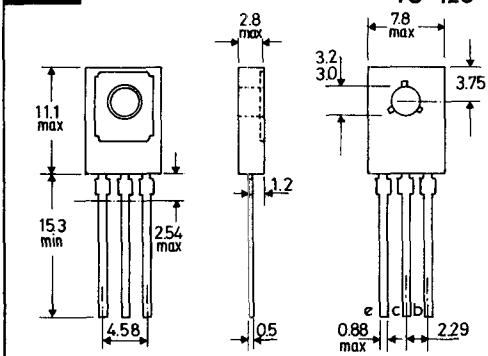

BF

TO-220

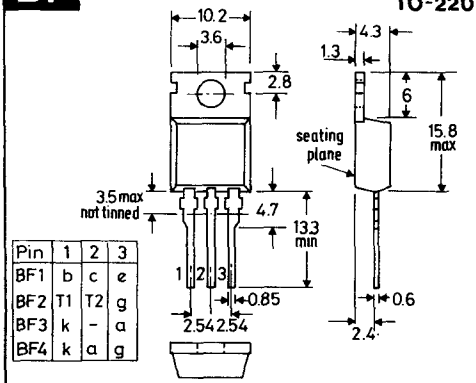

Pin	1	2	3
BF1	b	c	e
BF2	T1	T2	g
BF3	k	-	a
BF4	k	a	g

These drawings give limited information for quick reference purposes. For equipment design more complete information should be obtained from individual data sheets in the Technical Handbook or from standard B.S. or JEDEC outline drawings.

BG

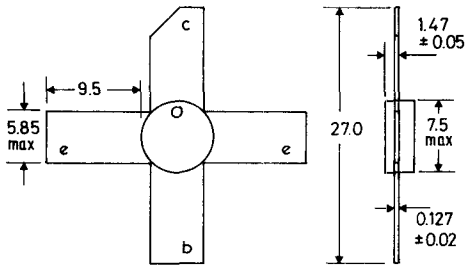

BH

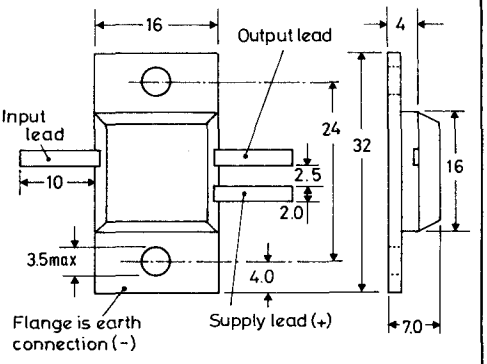

BJ

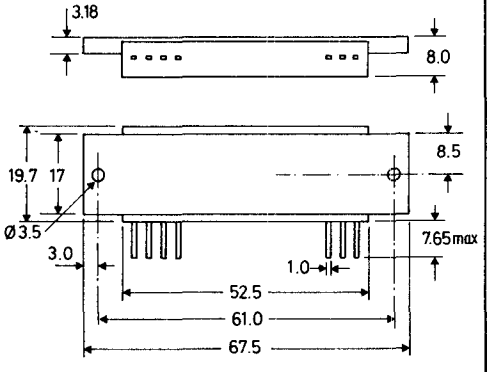

BK

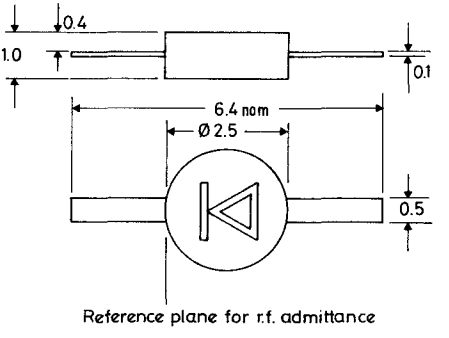

BL

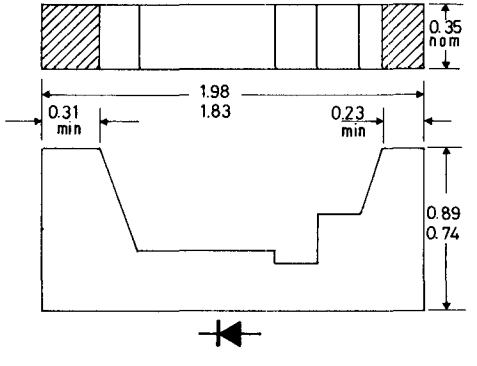

BM

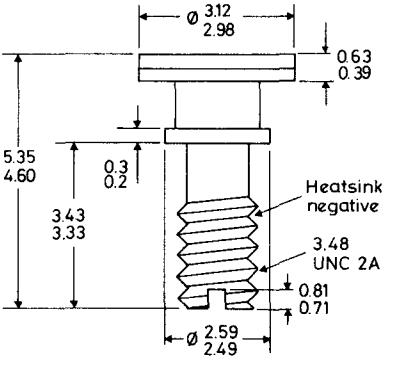

BN

B.S.3934 SO-26

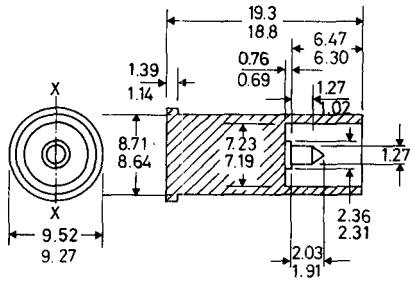

(All dimensions max.)

BO

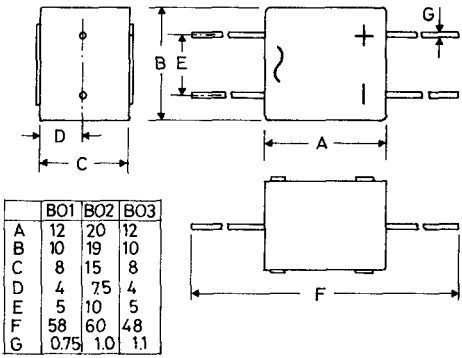

	BO1	BO2	BO3
A	12	20	12
B	10	19	10
C	8	15	8
D	4	7.5	4
E	5	10	5
F	58	60	48
G	0.75	1.0	1.1

BP

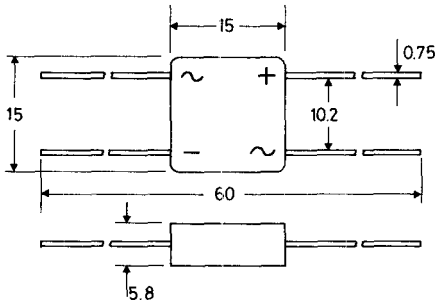

BQ

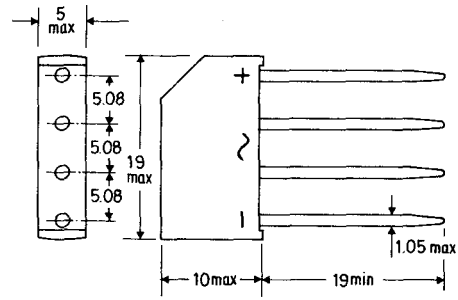

BR

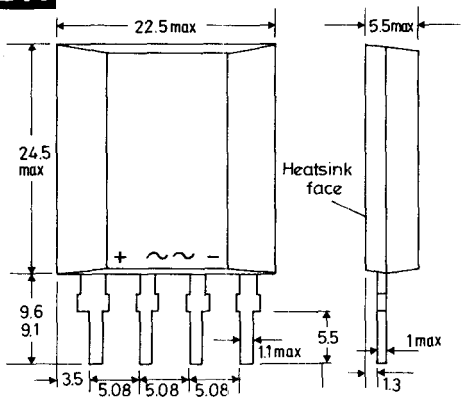

BS

B.S.3934 SO-67

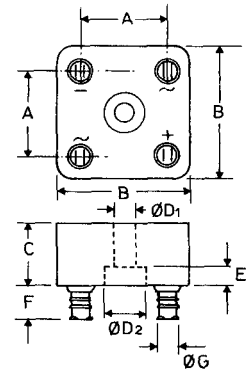

	BS1	BS2
	typ.	max
A	23	21
B	35	34.6
C	17	15.2
ØD1	5	5.05
ØD2	11	11
E	5	3.7
F	9	9
ØG	4.8	4.8

These drawings give limited information for quick reference purposes. For equipment design more complete information should be obtained from individual data sheets in the Technical Handbook or from standard B.S. or JEDEC outline drawings.

BT

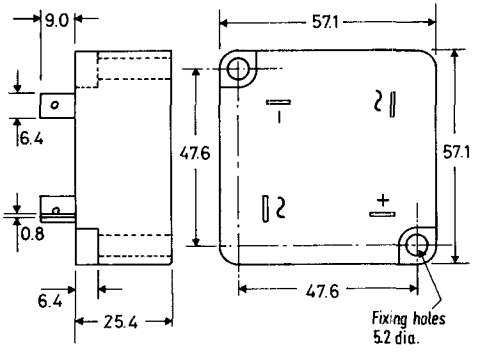

BU

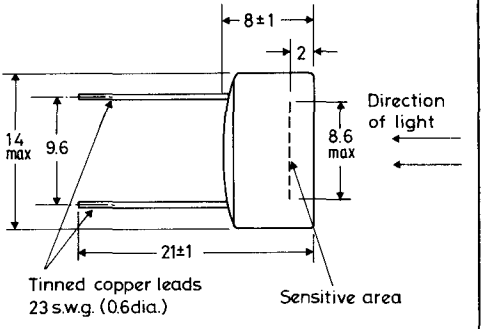

BV

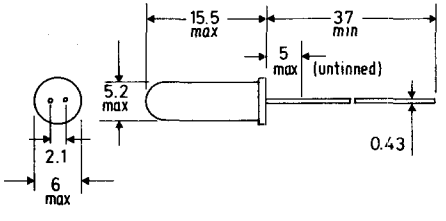

BW

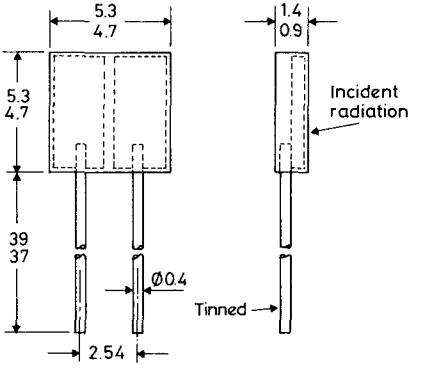

BX

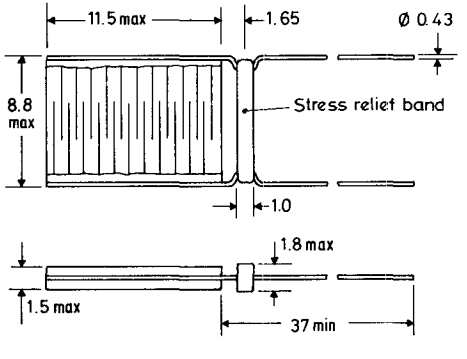

BY

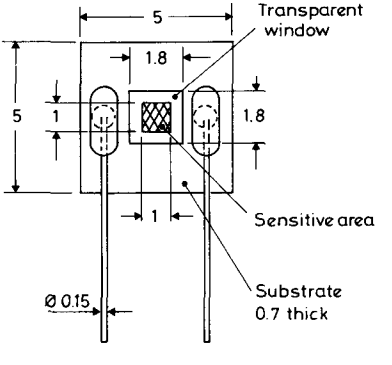

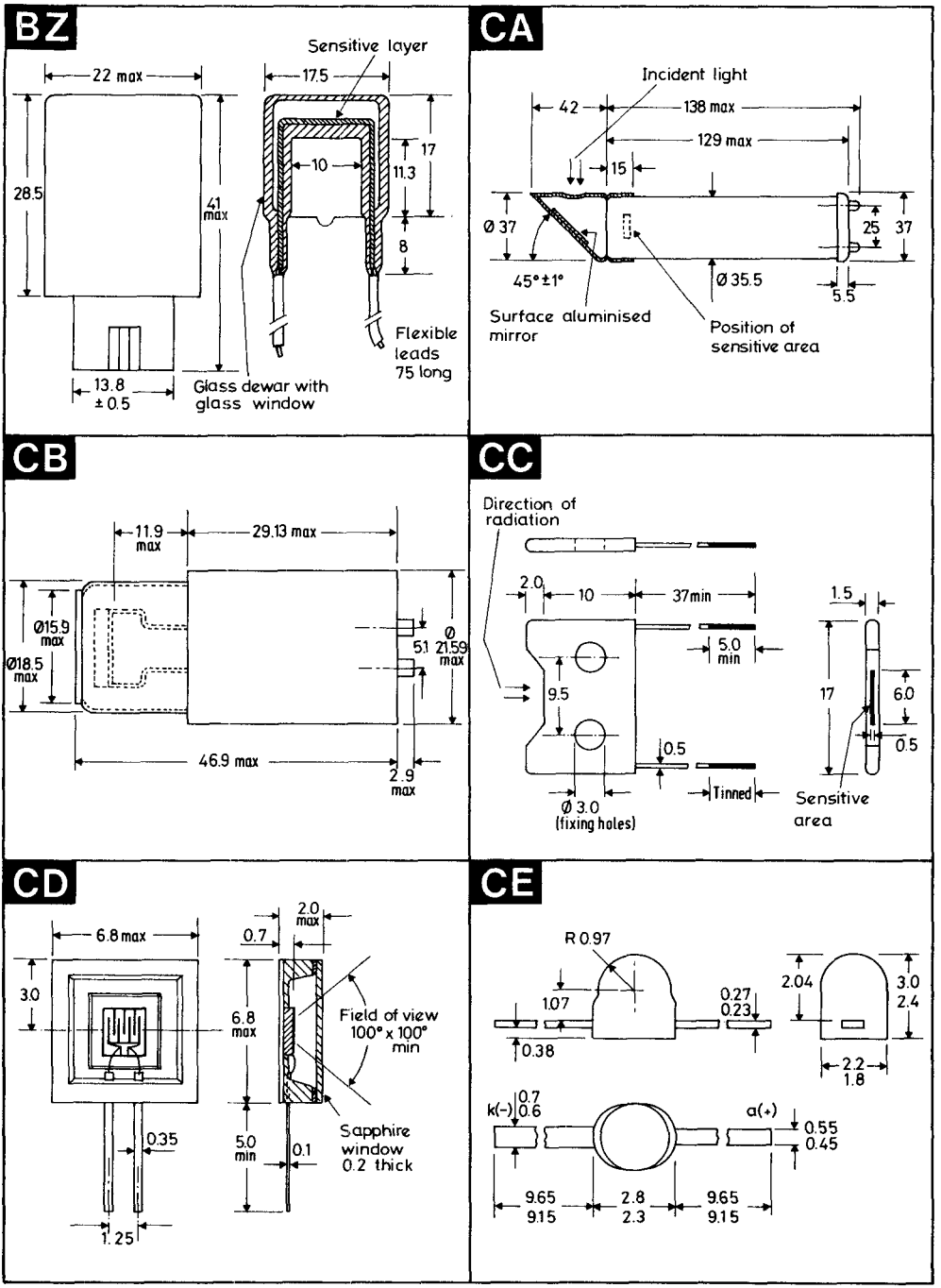

These drawings give limited information for quick reference purposes. For equipment design more complete information should be obtained from individual data sheets in the Technical Handbook or from standard B.S. or JEDEC outline drawings.

CF

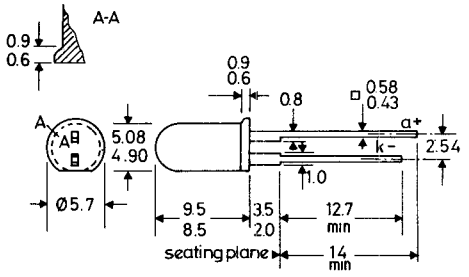

CG

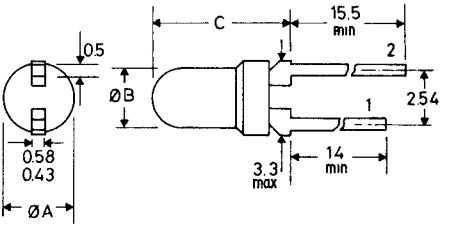

	1	2	ØA	ØB	C
CG1	k(-)	a(+)	3.0-3.17	2.4-2.6	5.8-6.3
CG2	a(+)	k(-)	3.0-3.17	2.4-2.6	5.8-6.3
CG3	k(-)	a(+)	3.3 max	2.65-3.17	4.8-6.3

CH

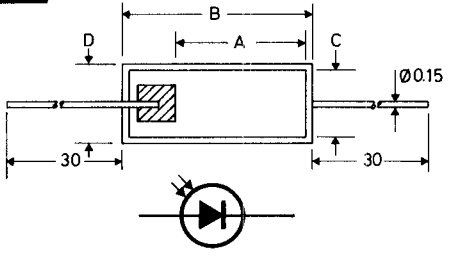

	CH1	CH2
A	2.2	3.5
B	3.35	4.55
C	0.95	1.85
D	1.25	2.15

CJ

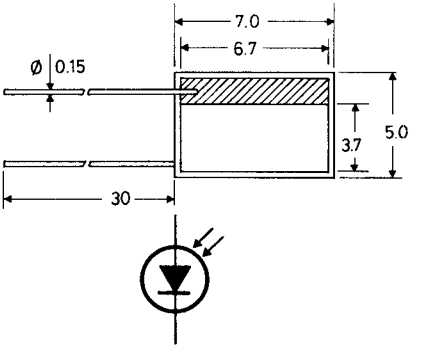

CK

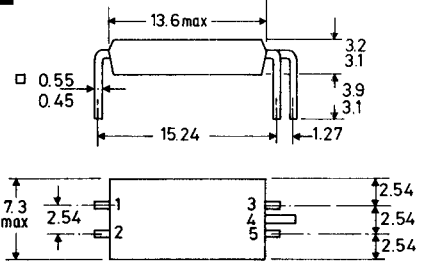

Pin	1	2	3	4	5
CK1	a	k	b	c	e
CK2	k	a	e	omitted	c

CL

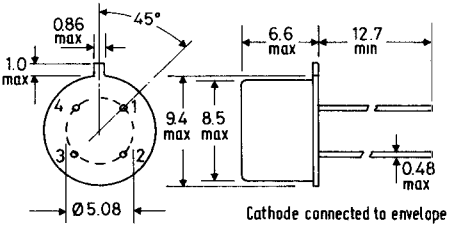

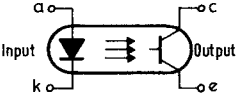

Pin	1	2	3	4
CL1	a	k	e	c
CL2	e	c	a	k

CM

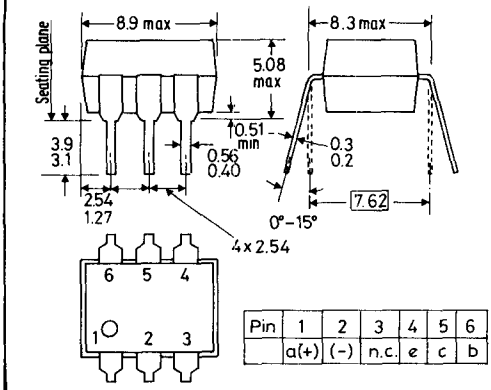

Pin	1	2	3	4	5	6
	a(+)	(-)	n.c.	e	c	b

CN

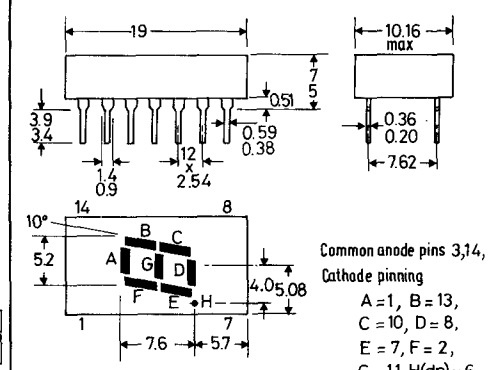

Common anode pins 3,14,
Cathode pinning
A = 1, B = 13,
C = 10, D = 8,
E = 7, F = 2,
G = 11, H(dp) = 6

CO

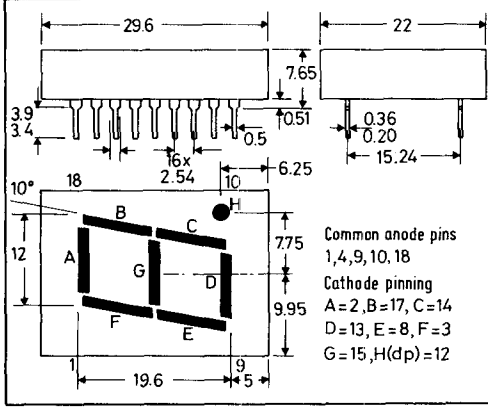

Common anode pins
1,4,9,10,18
Cathode pinning
A = 2, B = 17, C = 14
D = 13, E = 8, F = 3
G = 15, H(dp) = 12

These drawings give limited information for quick reference purposes. For equipment design more complete information should be obtained from individual data sheets in the Technical Handbook or from standard B.S. or JEDEC outline drawings.